REV.	DESCRIPTION	DATE
A	RELEASE	Aug 13, 2012

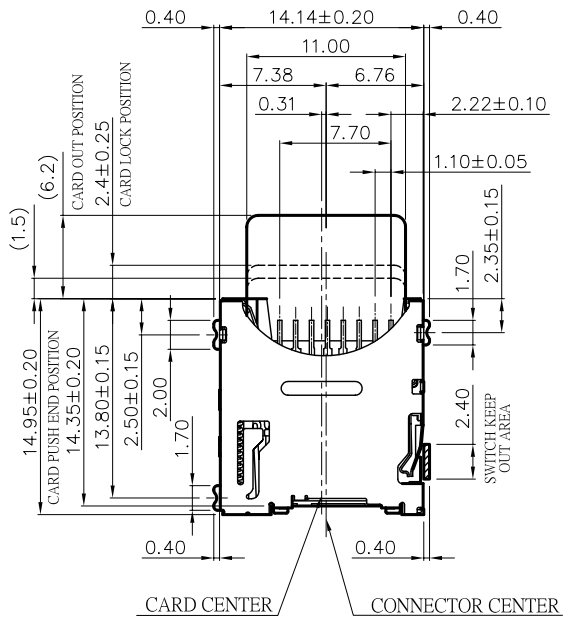

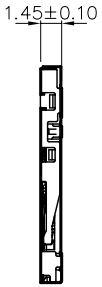

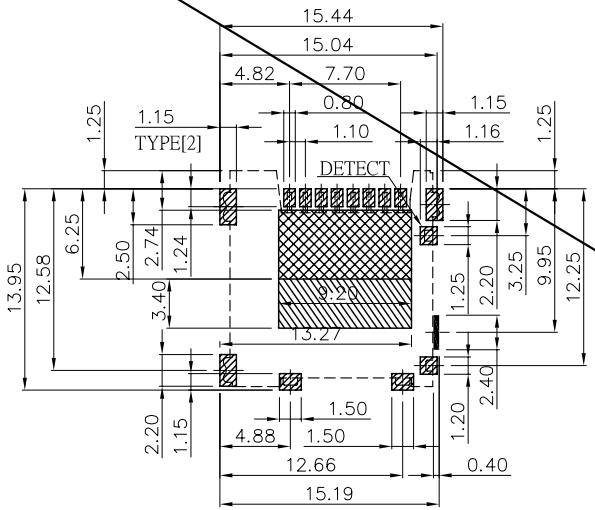

RECOMMEND PCB LAYOUT
TOLERANCE: ±0.05
TOP VIEW

MATERIALS

1. HOUSING : THERMOPLASTIC (UL 94V-0).
2. TERMINAL : COPPER ALLOY,
   PLA
   PLATING : NICKEL PLATED OVERALL.

SPECIFICATION

1. CURRENT RATING : 0.5 A. MAX.
2. DIELECTRIC WITHSTANDING VOLTAGE :
   500V AC R.M.S. FOR 1 MINUTE.
   JLATION RESISTANCE : 1000MΩ MIN.AT 100V DC.
4. CONTACT RESISTANCE : 100mΩ MAX.
5. OPERATING TEMPERATURE : -40°C TO +85°C.

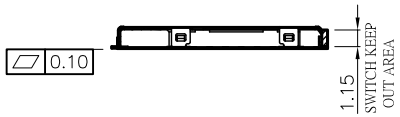

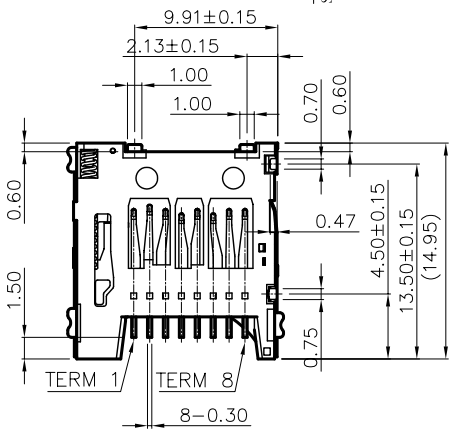

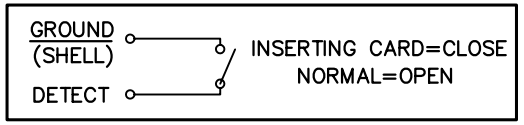

PART NUMBER INFORMATION :

5101108-X1102S-X

- SERIES CODE
- SMT 90°
- T-FLASH CARD
- SINGLE TYPE
- NUMBER OF POSITIONS
- PLATING SEE TABLE
- INSERT TYPE
- WITH PUSH
- FOLLOW NUMBER
- R: RoHS
  H: HALOGEN FREE

DESCRIPTION OF PLATING ON TERMINALS			
NO.	EXPLAIN	NO.	EXPLAIN
0	GOLD FLASH	3	GOLD 15u"
1	GOLD 5u"	4	GOLD 20u"
2	GOLD 10u"	H	G/F + TIN

TOLERANCE .0=±0.25 .00=±0.15 .000=±0.05 ANG.=±3°	DRAWER JERRY CHECK JERRY APP'D KAWX PRODUCT SPEC. —	汉硕电子科技有限公司
UNITS : mm		NAME T-FLASH CARD CONN 1.45H
SCALE NONE / SIZE A6	SHEET 1 OF 1 / REV. A	DRAW NO. R5101108-X1102S-X

DRAWING NAME: R